Press Pac® 1600

PRESS PAC® 1600 SERIES
PNEUMATIC ACTUATION / OIL COOLED PRESS DRIVES

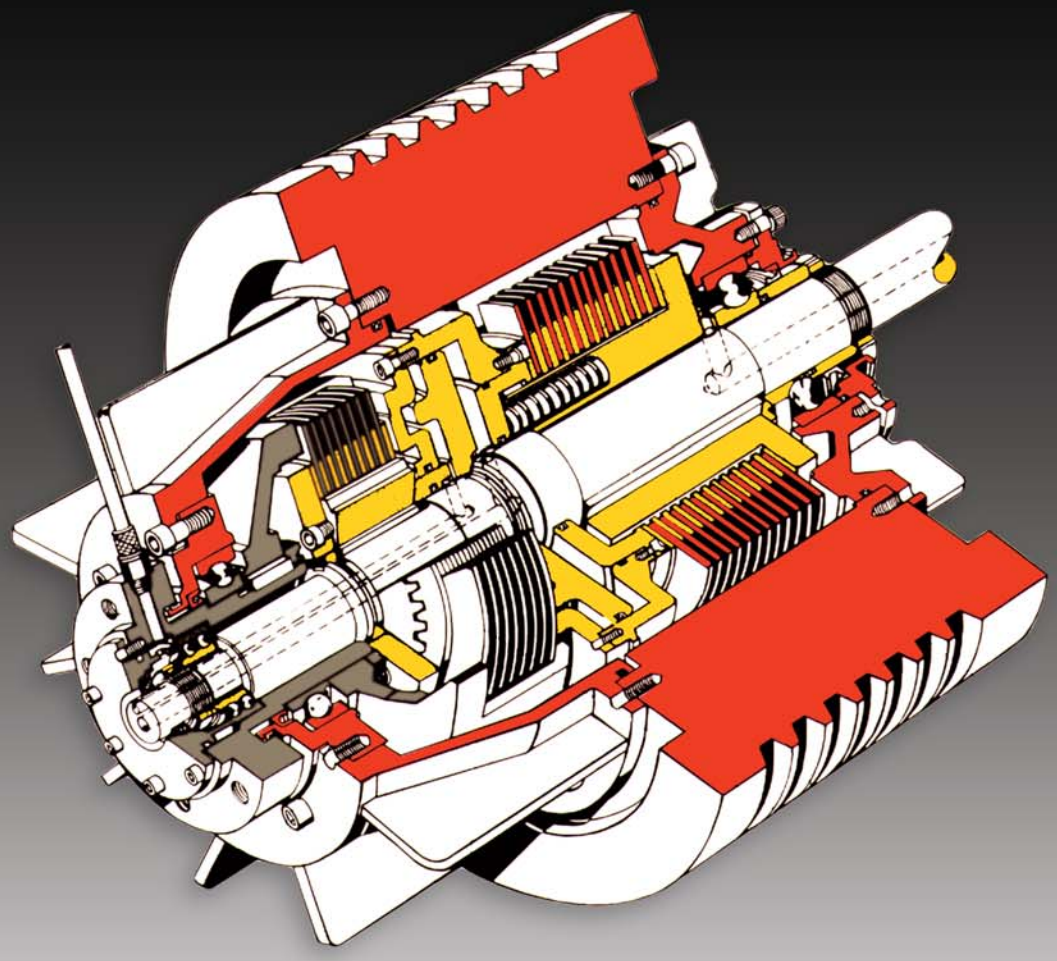

High Performance Press Drives For Metal Forming Presses

MIDWEST® BRAKE

Press Pac® 1600 Series Integral Press Drive Systems

The original Press Pac® Oil Shear Press Drives were introduced in 1968. Since that time, our press drive systems are proven in the toughest of applications where reliability and performance of these systems are necessary to meet today's production requirements.

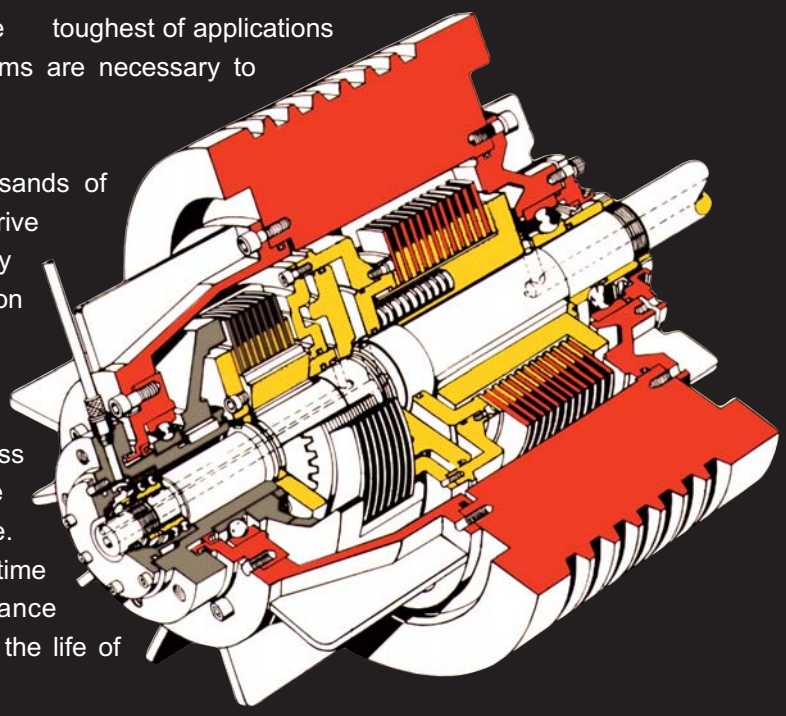

Since 1968, Midwest Brake has converted thousands of geared stamping presses to the Press Pac® drive system. Most presses are simply and easily converted to Press Pac® with only minor modification to the existing press parts.

Superior performance and ease of installation make the Press Pac® 1600 Series the preferred press drive for the metal forming industry, automotive stamping and contract stamping facilities world wide. Press Pac® 1600 Series will increase machine uptime and reliability, provide reduced maintenance requirements and will decrease repair costs over the life of your equipment.

Press Pac® 1600 Series – Proven and Reliable

Press Pac® 1600 Series is the 1st generation of Press Pac® technology that includes advanced pneumatic actuation and oil cooling technology.

Commercially introduced in 1968, our drive systems are the most rugged, durable press drives available on the market today. No other press drive matches the performance, durability and reduced life cycle cost of the Press Pac®.

Press Pac® Applications

- Stamping Presses
- Forging Presses & Upsetters
- Headers
- Press Brakes
- N.C. Turret Punch Press
- Metal Forming Equipment
- Welding Presses

Press Pac® Benefits

- Increased Production Rates
- Increased Reliability & Machine Uptime
- Reduced Life Cycle Costs
- Simple Installation
- Minimal Maintenance Requirements

Oil Shear Drives For Metal Forming Equipment

Complete Drive System Engineering

The Press Pac® Oil Shear Press Drive System is a turnkey system that is ideally suited for retrofit applications on existing equipment. The 1600 Series is an integral drive unit with clutch/brake mounted internal of the flywheel on the drive shaft.

Custom mounting brackets and adaptors are designed to fit the footprint of the old clutch/brake and eliminates costly modifications and onsite machining of the press. The unit is easily adaptable to fit most geared press drive arrangements and mounting configurations.

The Press Pac® 1600 turnkey system includes the clutch/brake components, mounting brackets, design engineering and the installation support needed to retrofit the original clutch/brake system quickly and easily.

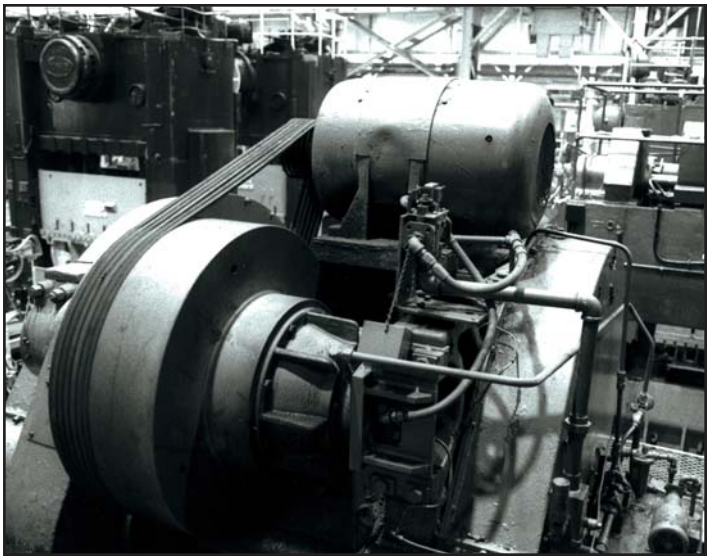

Press Pac® 1600 Series – 300 Ton Cleveland

Press Pac® Drive Package

- Complete Drive System Engineering
- New Flywheel
- New Flywheel Bearings
- New Drive Shaft
- New Oil Shear Clutch/Brake
- New Clutch/Brake Housing
- New Mounting Brackets
- New Rotary Union
- New Hydraulic Tank/Circulating Oil System
- Field Service Technician Check Out

Circulating Oil System

Included with the conversion package, the circulating oil system and controls package comes completely assembled and tested at the factory before shipment. This system includes an oil tank with the pump motor, valves, dual press safety valve, heat exchanger, and temperature switch mounted to the tank.

The circulating oil system's main function is to control the clutch engagement pressure and to circulate cooling oil through the Press Pac® clutch/brake. The system is easily adjusted to precisely control clutch engagement pressure and stopping times. The efficiency and low inertia of the Press Pac® drive system, combined with the pneumatic actuation provides split second response time to start and stop the press. Smooth, noise free, cushioned engagement of the oil shear clutch/brake will extend life of your press parts and gear train.

Midwest Brake® Oil Shear Press Drive History

1962	1st Retrofit of a Stamping Press with an Oil Shear Press Drive
1968	Press Pac® 1600 Series – Commercial Introduction Oil Shear Press Drive Pneumatically Actuated/ Oil Cooled
1986	Press Pac® 2000 – Field Test Oil Shear Press Drive Hydraulically Actuated/Oil Cooled
1991	Press Pac® 2100 Series – Commercial Introduction Oil Shear Press Drive Hydraulically Actuated/Oil Cooled
1994	500th Stamping Press – Retrofit
1997	Press Pac® 3200 Series – Commercial Introduction Oil Shear Clutch/Brake – OEM Design Hydraulically Actuated/Oil Cooled
2002	Over 4000 Stamping Press & Welding Press Drives Successfully Installed Worldwide

Press Pac® 1600 Series Integral Press Drive Systems

Press Pac® 1600 Series Integral Drive System

The Press Pac® 1600 Series Integral Press Drive System is a hydraulically actuated / oil cooled, multiple disc, combination clutch/brake for metal forming presses.

- Pneumatic Actuation / Oil Cooling
- 18 Standard Clutch/Brake Models
- Torque Range 6,667 Lbs-ft thru 120,000 Lbs-ft
- Presses Up to 4000 Tons

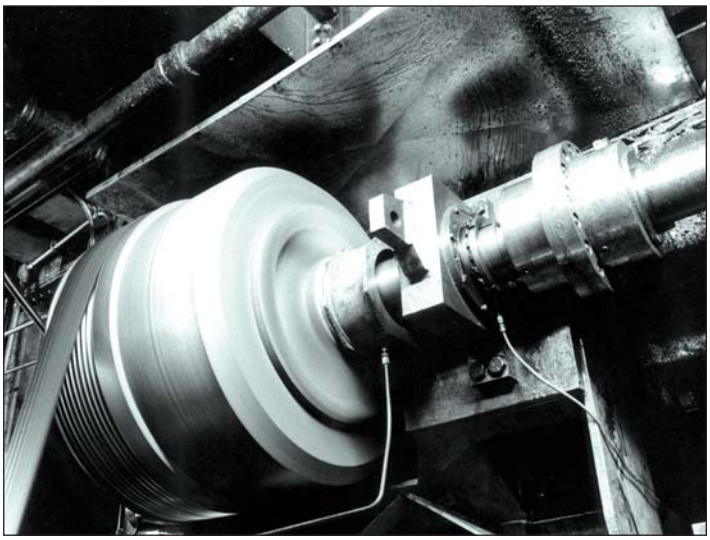

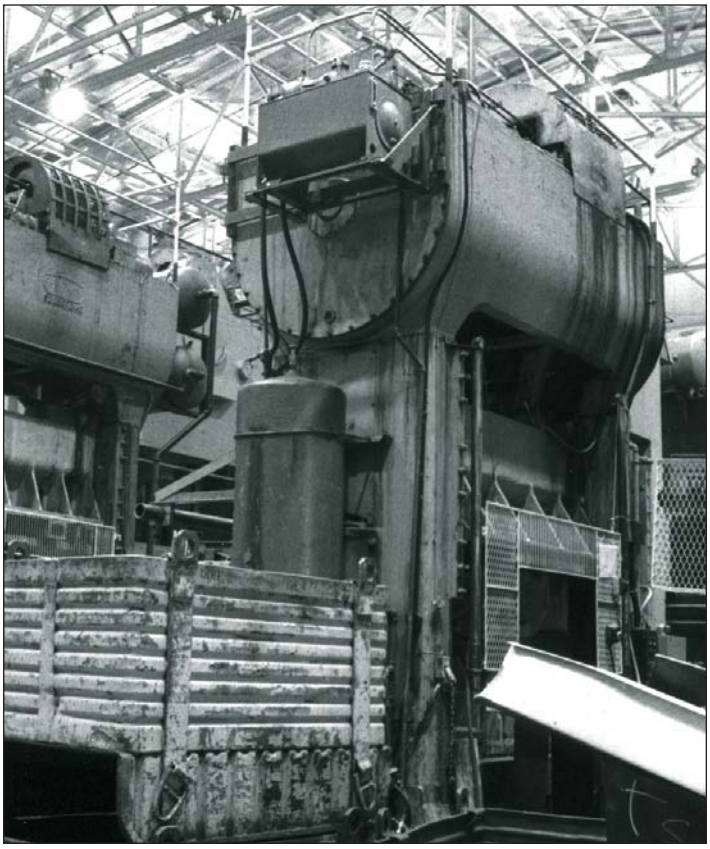

Press Pac® 1600 Series Benefits

Increased Production Rate

A single stroke rate of up to 90% of the continuous strokes per minute can be achieved with Press Pac® 1600. Increased thermal capacity allows for more strokes per minute, more parts per hour and a substantial cost savings can easily be realized through the advanced oil shear tehnology.

Increased Press Speed

The speed of the press can generally be increased up to 25% without a gear change. The thermal capacity of the Press Pac® 1600 allows for a simple sheave change to increase the speed of your press, which increases more stokes per minute and ultimately more throughput.

Longer Clutch/Brake Life

The advanced circulating oil system delivers cool oil to lubricate friction discs. Oil shear technology, the viscous shearing of oil between alternating discs, transfers torque and drive inertia resulting in less wear on the friction disc surfaces.

Maintenance Free

Press Pac® provides millions of strokes with little to no maintenance or repair requirements and thus, will lower your annual maintenance cost.

Smooth, Quiet Engagement

Noise free, cushioned engagement of oil shear technology decreases gear train wear and extends the life of press parts.

Excellent Start / Stop Capability

Precise, repeatable clutch engagement and improved stopping times are easily achieved through simple set up and adjustments to the control system. Reduced stopping times can provide faster press cycle times and improve machine productivity.

Reduced Life Cycle Costs

Achieve up to 10 years of high volume production without any press downtime or costly repairs. Press Pac®, when compared to standard dry friction clutch/brakes, eliminates costly downtime to replace damaged parts, packings and worn out brake linings and presents a substantial cost savings of the life of your machine.

Oil Shear Drives For Metal Forming Equipment

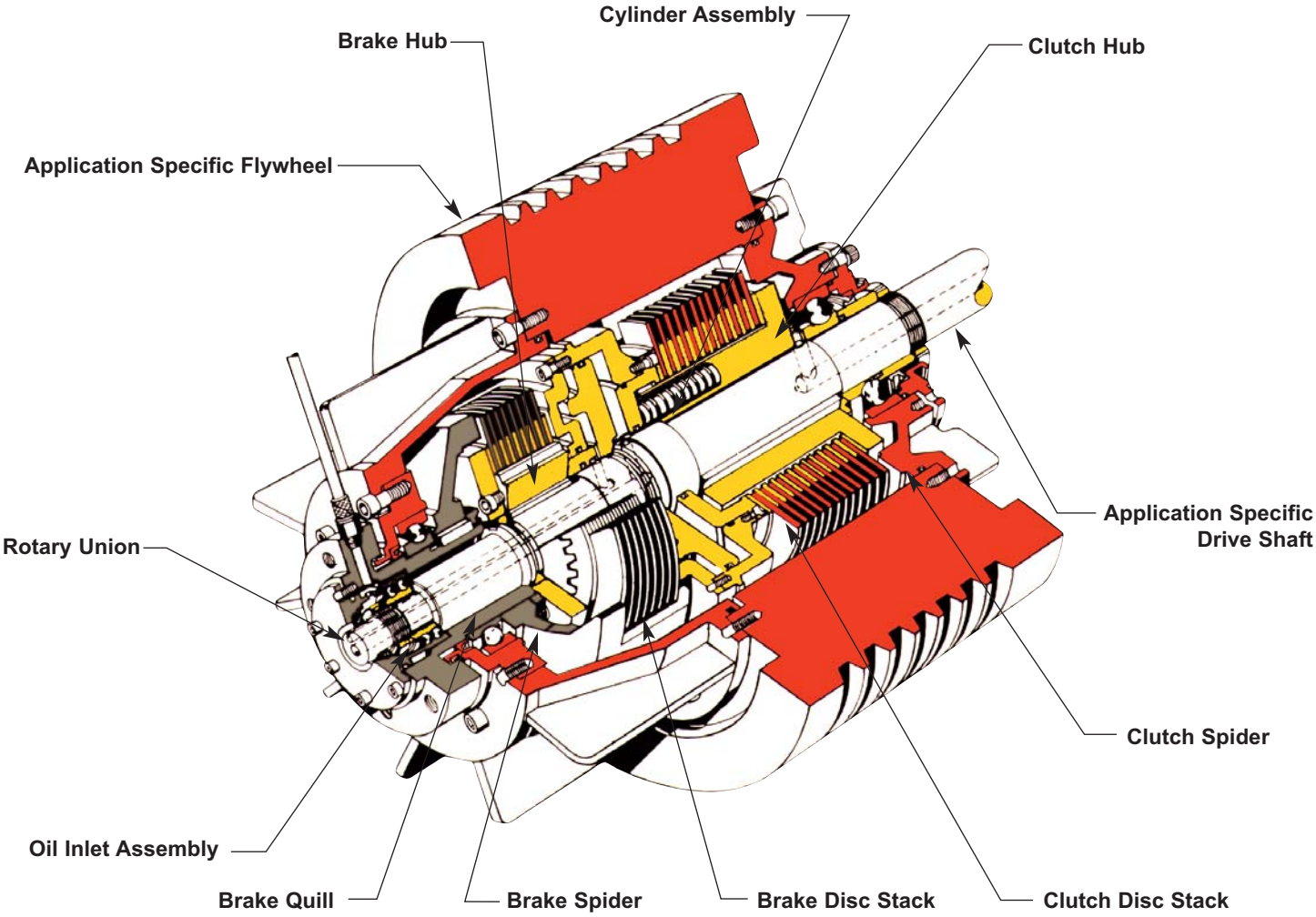

Circulating Oil System

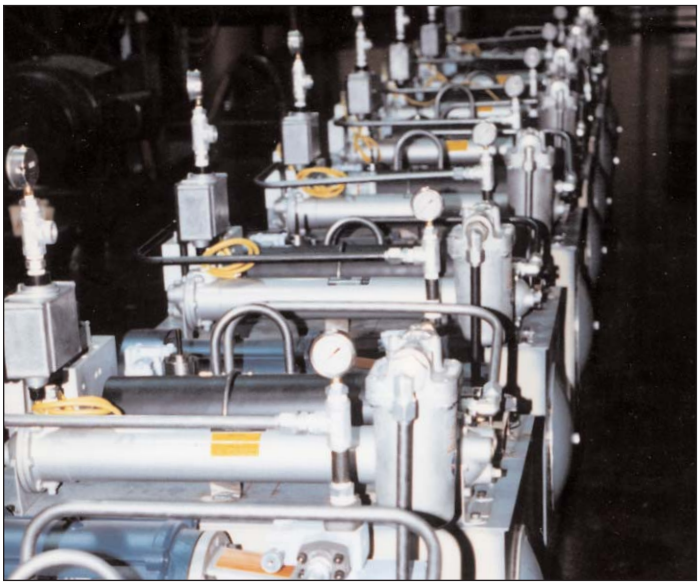

Press Pac® 1600 Series Specifications

Model No.	Clutch Torque		Brake Torque		Oil Tank Capacity	
Integral Mounted	Lb-ft @80 PSI	Nm @5.52 Bar	Lb-ft	Nm	Gallons	Liters
1608	6,667	9,039	2,841	3,841	20.0	75.70
1609	6,667	9,039	3,896	5,282	20.0	75.70
1610	8,333	11,298	2,833	3,841	20.0	75.70
1612	8,333	11,298	3,895	5,282	20.0	75.70
1616	11,583	15,705	8,083	10,959	30.0	113.56
1618	11,583	15,705	11,146	15,112	30.0	113.56
1624	17,458	23,670	8,083	10,959	30.0	113.56
1626	17,458	23,670	11,146	15,112	30.0	113.56
1630	21,833	29,602	8,083	10,960	30.0	113.56
1632	21,833	29,602	11,146	15,112	30.0	113.56
1640	29,108	39,466	8,083	10,960	30.0	113.56
1642	29,108	39,466	11,125	15,083	30.0	113.56
1660	54,166	73,440	25,667	34,799	80.0	302.83
1662	54,166	73,440	35,292	47,849	80.0	302.83
1670	70,417	95,472	25,667	34,799	80.0	302.83
1672	70,417	95,472	35,292	47,849	80.0	302.83
1685	87,917	119,199	25,667	34,799	80.0	302.83
1687	87,917	119,199	35,292	49,849	80.0	302.83

Operation

Extremely simple and compact in design, the “Press Pac® 1600” is built right into the flywheel. A flywheel housing (1) and a clutch spider (16) bold to the flywheel (22). Combined with the inside diameter of the flywheel, these form an enclosed cavity which is at all times filled with oil. All the other parts fit inside this cavity, and are assembled onto the driveshaft.

The flywheel housing and the clutch spider rotate continuously with the flywheel. The steel clutch discs (21), driven by four key-type lugs that are integral with the clutch spider, also rotate continuously at flywheel speed.

Steel brake discs (2) are retained by four lugs on a brake spider (4). The brake spider is keyed to a quill (7) that is attached to the press frame. Thus, the stopping reaction of the brake is transmitted through the steel discs to the press frame, which absorbs the impact.

All the other parts – a brake hub (5), bronze clutch and brake friction discs (3-20), clutch hub (19), actuating cylinder (14), and brake springs (15) – start and stop with the driveshaft as the clutch or brake are engaged.

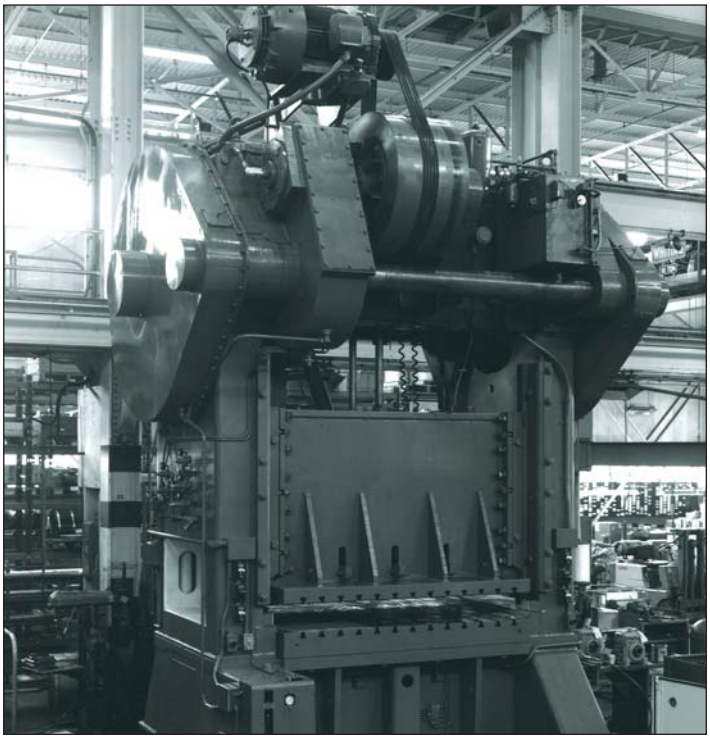

Clutch & Brake Engagement

The same interlocking principle which has proven most reliable on air friction units has been retained in the design of the “Press Pac® 1600” with the added advantages of a more compact and efficient unit. A multiple disc clutch stack and multiple disc brake stack each require clamping force for clutch or brake engagement. The clutch clamping force is air actuated and the brake clamping force spring actuated.

The clutch actuation chamber (12) is interlocked with the brake springs (15) so that it is impossible for both to be engaged at the same time. Then air is admitted to the clutch actuation chamber, the first movement of the chamber compresses the brake springs and releases the brake. Then air is exhausted from the actuation chamber, the brake springs force the chamber toward the brake stack, releasing the clutch instantaneously before braking pressure is applied.

This arrangement eliminates any possibility of clutch/brake overlap, and it also assures that, in case of air or electrical malfunction the press will be automatically stopped. As an added safety feature, operating temperature and oil flow monitors, interlocked with the main motor, automatically stop the press in the event of any malfunction that might cause damage to the clutch and brake assembly

Circulating Oil System

A continuous supply of cool oil is circulated through the “Press Pac® 1600” b an external reservoir and pump which are electrically interlocked with the main press motor. Oil enters the drive cavity through a rotary movement of the oil through both disc stacks is provided by routing it first through drilled holes in the clutch hub, then through grooves and ports in the brake hub and pressure plate.

The oil leaves the drive cavity through a port (8) located toward the top of the quill. External pipes route it first upward, then downward to the oil reservoir. This arrangement assures that the drive cavity is always full of oil, without introducing back pressure into the drive.

Since the drive runs full of oil, a balance chamber (11) that is vented to the atmosphere is incorporated into the actuation cylinder. This reduces the oil displacement to a bare minimum when the clutch is engaged.

To further assure long operation without oil leakage around the press, external labyrinth seals are incorporated to catch and recirculate any “weepage” that might occur through the primary seals.

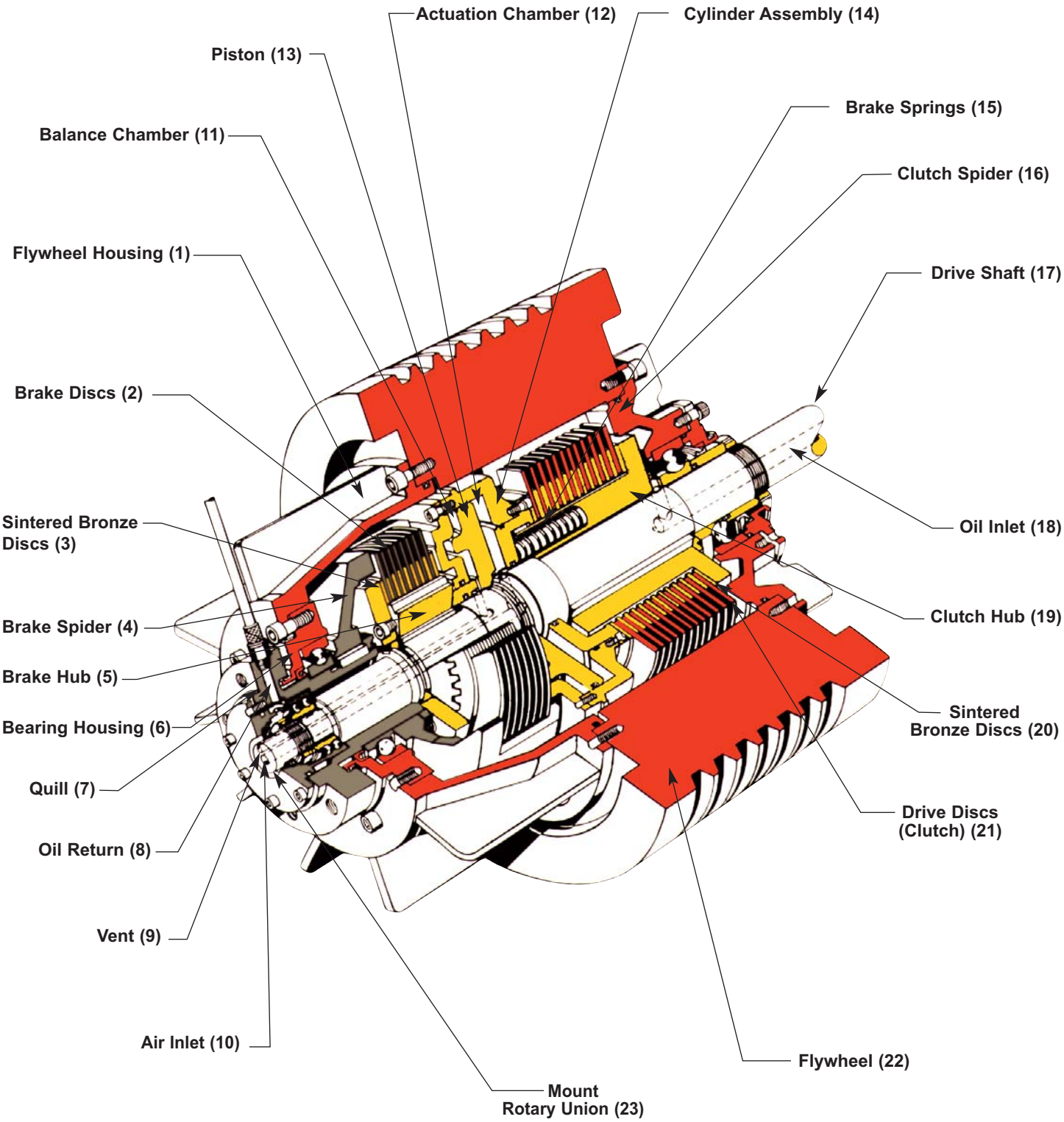
Actuation Chamber (12)
Cylinder Assembly (14)
Piston (13)
Brake Springs (15)
Balance Chamber (11)
Clutch Spider (16)
Flywheel Housing (1)
Drive Shaft (17)
Brake Discs (2)
Sintered Bronze Discs (3)
Oil Inlet (18)
Clutch Hub (19)
Brake Spider (4)
Brake Hub (5)
Sintered Bronze Discs (20)
Bearing Housing (6)
Quill (7)
Drive Discs (Clutch) (21)
Oil Return (8)
Vent (9)
Air Inlet (10)
Flywheel (22)
Mount Rotary Union (23)

Press Pac® 1600 Series Integral Press Drive Systems

Installation

Press Pac® 1600 Series Integral Press Drive System is a turnkey package designed to mount as one integral unit for fast, easy installation. The Press Pac® unit comes fully assembled, tested and ready for installation.

Measurement of Press

A Midwest Brake® engineer will visit your facility to perform an analysis of your machine and the production process performed. At that time, the existing drive will be removed from the crown of the press so the existing press drive components can be measured.

Disassembly of certain drive components is necessary to design the conversion to the Press Pac®. These requirements are easily reviewed with a Midwest Brake® representative in preparation for measurement of the press.

Minimal Modifications To The Press

The Press Pac® 1600 Integral Press Drive System is custom designed and manufactured to minimize any modifications to the press crown. Most presses are easily and simply converted to Press Pac® with little to no modifications of your press.

After measurement of the press, our engineers design the mounting brackets, drive shaft and flywheel to fit in the same footprint of the old clutch/brake.

This minimizes any machining or modifications to the press and results in a quick, simple installation of the unit. Midwest Brake® will provide a detailed, step by step installation drawing upon shipment of the unit.

Press Pac® Drive Package Includes

- Complete Drive System Engineering
- Flywheel
- Flywheel Bearings
- Drive Shaft
- Oil Shear Clutch/Brake
- Clutch/Brake Housing
- Mounting Brackets
- Rotary Union
- Hydraulic Tank Circulating Oil System
- Field Service Technician Check Out

Tier 1 Automotive Stamping Plant

Minimal Modifications & Simple System Integration

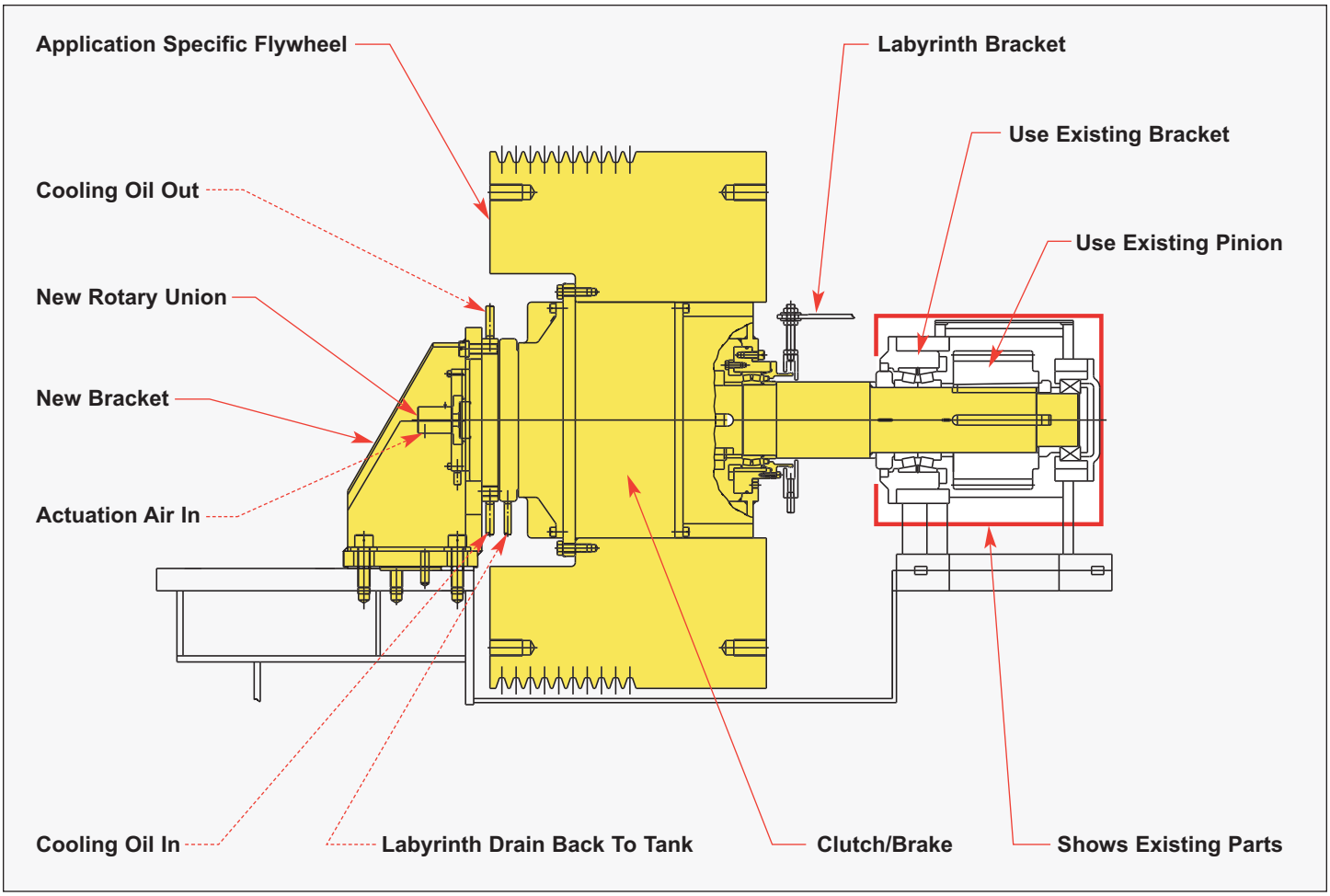

Design Features

Flywheel Design
The flywheel is designed to ideally have the same OD, ID and rim thickness of the original press flywheel. Flywheel grooves are measured and designed with the same groove pattern as the original press flywheel. The existing belt configuration duplicated. The new flywheel includes integral flywheel bearings which are self lubricated.

Motor
The main motor and the motor bracket locations do not need to be altered or moved, in most cases.

Pinion & Pinion Assembly
The pinion, pinion assembly, pinion saddles and mounting configuration are measured so the new drive shaft will mount in exactly the same position with little modification. (Pinion bore will need slight machining upon installation). The existing bearing specifications are designed into to the conversion package to minimize design changes.

Standard Parts

Standard Oil Shear Clutch/Brake
The Oil Shear Clutch/Brake is a standard design that is encased in the custom designed flywheel. These parts are standard, off the shelf parts in stock and ready for shipment if needed.

Hydraulic Tank
The hydraulic tank provides the actuation pressure and cooling oil flow to the unit. The tank is a standard design utilizing standard, off the shelf components.

Oil Cooling

The Press Pac®'s main design feature is to extend the life of the unit and increase the MTBF (Mean Time Between Failure) of the equipment. The main reasons for longer life of the unit are:

Patented Reverse Cooling Oil Flow

The Press Pac® unit has a patented "Reverse Oil Flow" which forces cooling oil through the shaft bore and flushes the brake discs and the clutch discs with cool oil. The oil is forced through the unit at a high rate and returns it to the tank to where it is cooled and recycled.

Friction Disc Lubrication – Forced Lube

The patented "Reverse Oil Flow" forces cooling oil directly into the clutch and brake disc assemblies through shaft bore porting and forces the oil back to the tank to be cooled. This forces oil in between the friction disc and the wear plates and provides cooling and separation between these discs. The friction discs have a special groove pattern that increases cooling flow through the disc stacks.

Hydraulic and Pneumatic Systems Inspection

Clutch & Brake Stacks – Flushed Heat Dissipation

The clutch and brake disc stacks are constantly flushed with fresh, cool oil allowing for maximum heat dissipation from the shaft bore porting. The unit is completely full of oil and the constant flushing of the disc stacks leads to long life of the sintered bronze friction discs.

Flywheel Bearings – Continually Lubricated

The flywheel bearings are an integral part of the drive unit and are lubricated by the circulating cooling throughout the unit. This extends bearing life and extends the life of the Press Pac® unit.

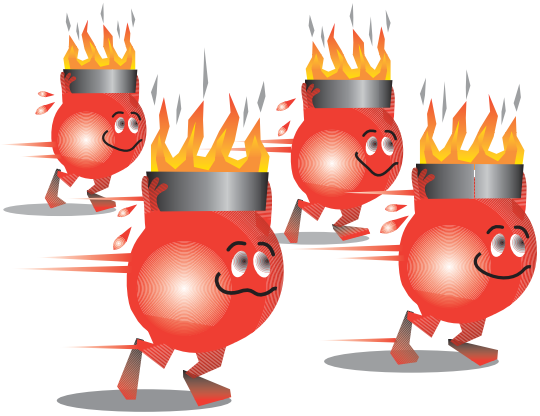

Shaft Seals – Continually Lubricated

The shaft seals are continually lubricated which allows them to seal properly. Seal "weepage" is inherent in seal design. The lip of the oil seal must run dry to seal causing the seal to wear. Once the seal starts to weap, the lip is lubricated and wear is greatly diminished. Midwest Brake® utilizes labyrinth style brackets to capture seal "weepage" and return to tank.

Installation Schematic

The Press Pac® 1600 Series Integral Press Drive System is designed for multiple press drive configurations. Midwest Brake® has not encountered a geared press design, world wide 50 - 4000 tons that cannot be successfully converted to Press Pac®.

Examples of some of the popular mounting arrangements are shown below as a point of reference for understanding our product offering.

Should you have requirements that are different than what are shown here, Midwest Brake® offers other Press Pac® products that can accommodate your needs.

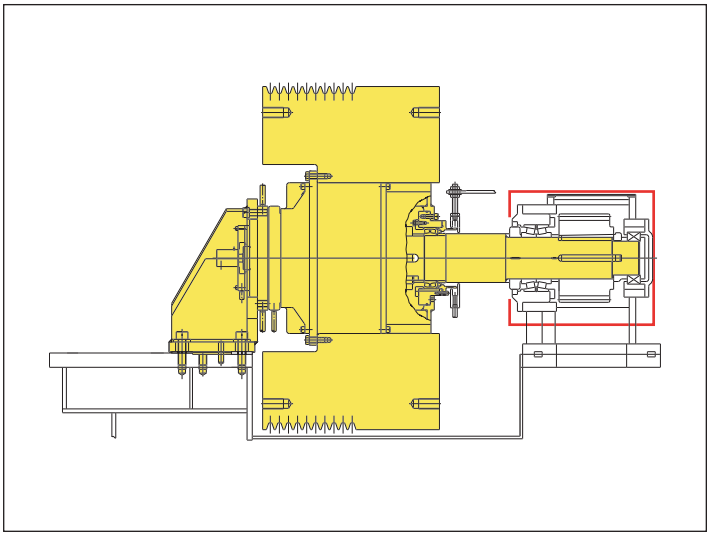

Standard Top Mount – Short Bracket

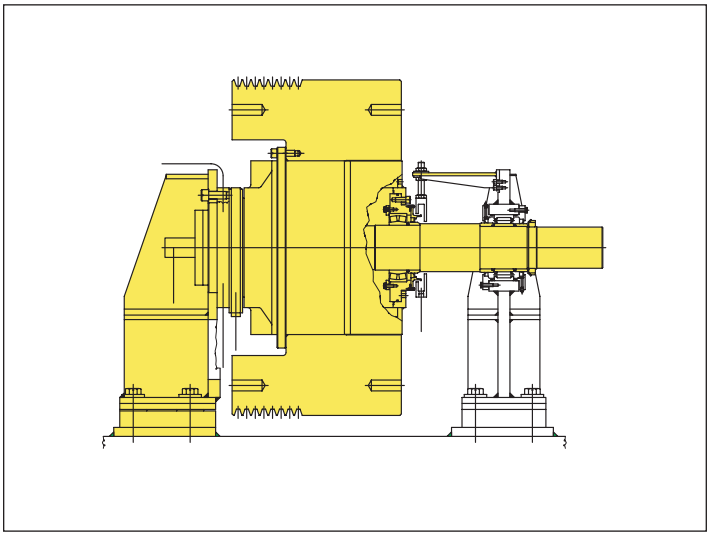

Standard Top Mount – Long Bracket

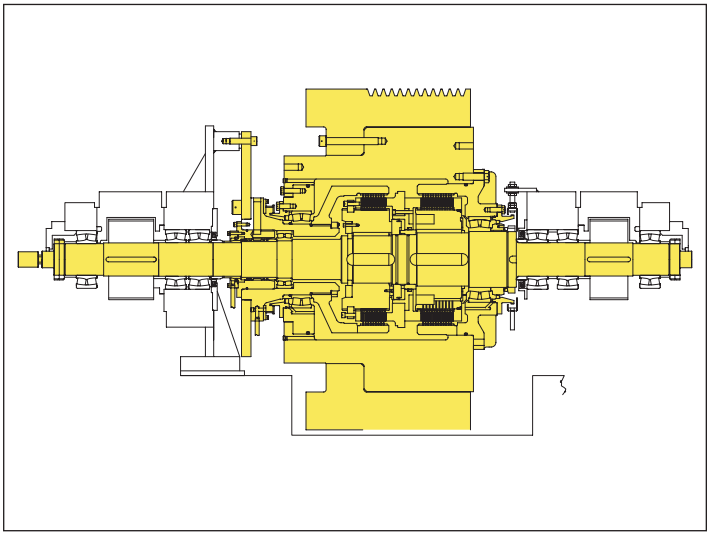

Dual Pinion Style

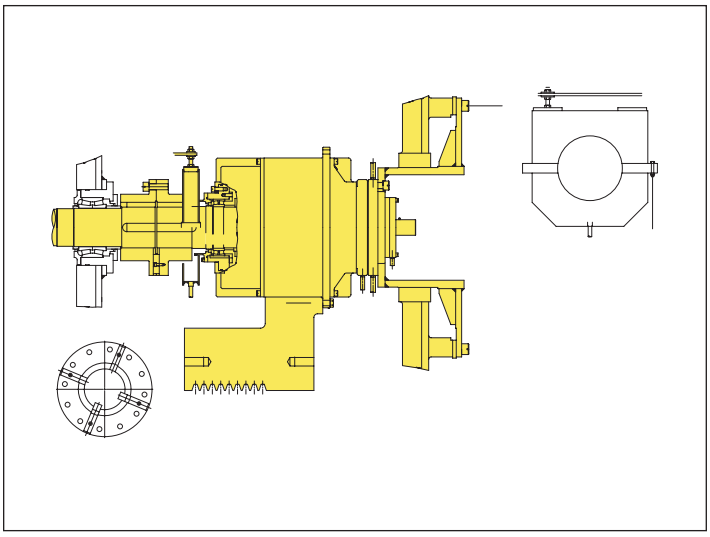

Outrigger Style

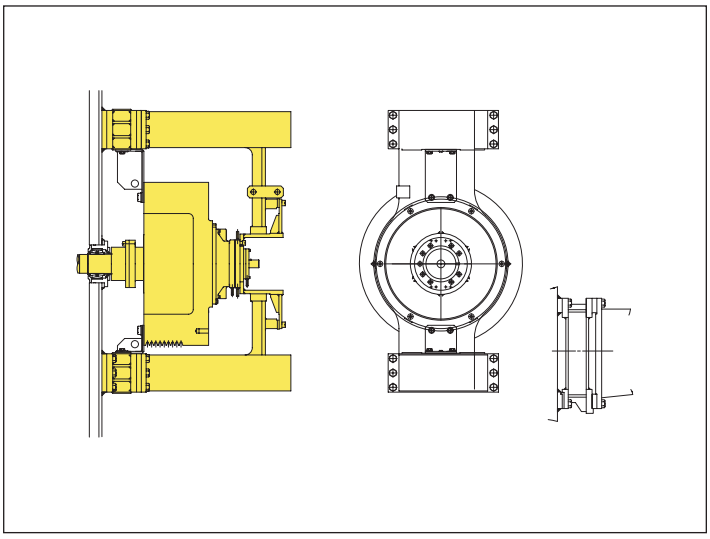

Outrigger Style

Oil Shear Principle

Press Pac® 1600 Series Integral Press Drive transmits torque through the shearing of oil molecules between alternating sintered bronze friction discs and steel wear discs. The viscous shearing of the oil (automatic transmission fluid) dissipates the heat generated from the operation of the Press Pac® and is carried away by the continuous circulation of the oil.

The oil shear principle is the primary reason oil shear clutch/brakes offer extremely long service life and superior reliability.

Press Pac® drive systems incorporate a true oil shear into the design where the friction discs are continuously flooded with oil to lubricate and cool friction disc surfaces. A true oil shear actually cuts across the film of oil molecules that is maintained between the alternating disc surfaces.

The oil itself acts as efficient power transmission medium, which relieves the mechanical friction surfaces of much of the work. The oil effectively absorbs and dissipates heat while lubricating the clutch/brake.

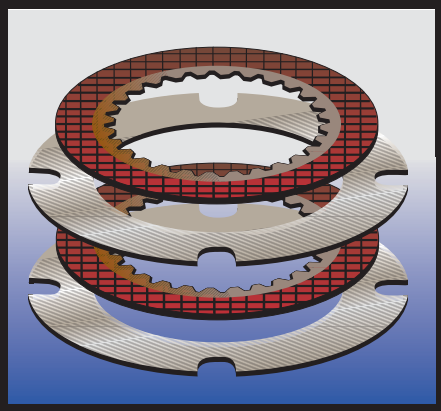

The Press Pac® Clutch/Brake contains a stack of alternating discs. Press Pac® utilizes advanced composite sintered bronze friction discs and steel disc wear plates.

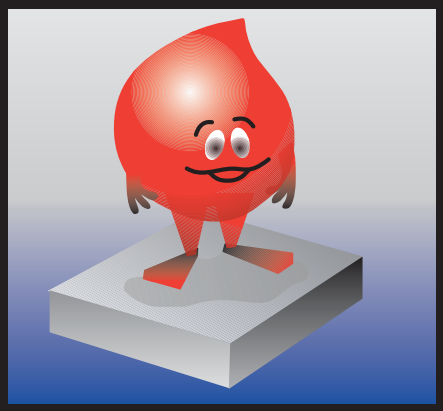

Operation of the Press Pac® Clutch/Brake begins with the oil film which is made up of multiple oil molecules. Molecules of oil are attracted to one another, giving oil defined viscosity.

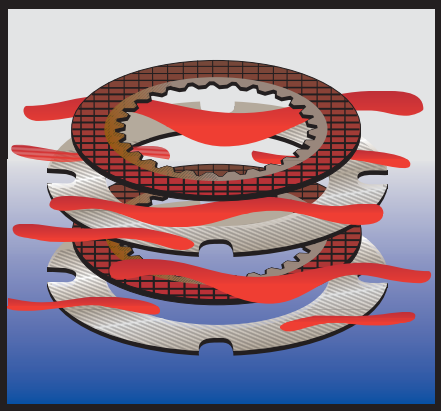

The Press Pac® Clutch/Brake maintains a film of oil between the friction surfaces, through which torque is transferred.

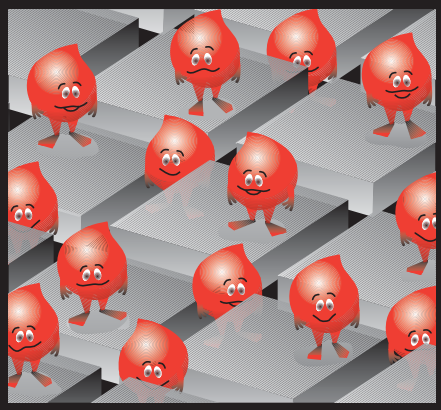

Oil molecules ride on and between the friction discs and act like small hydro dynamic bearings.

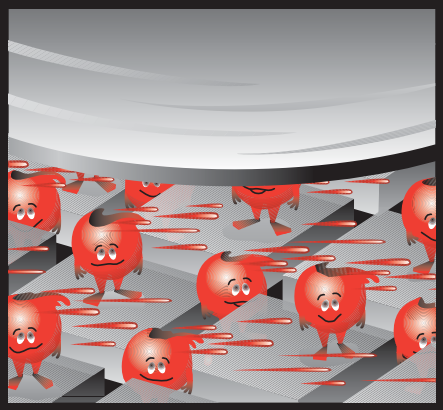

As the friction discs begin to rotate, the opposing drive cuts across the film of oil molecules.

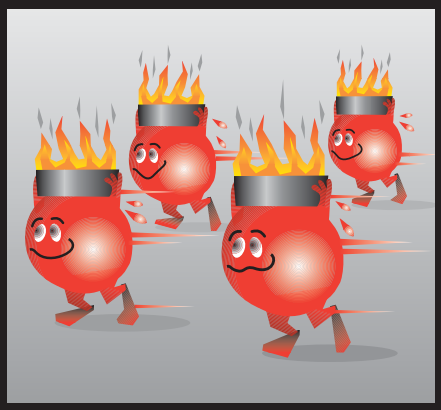

The kinetic energy (heat) generated during operation of the Press Pac® Clutch/Brake is carried away by the continuous circulation of the oil molecules.

Oil Shear Principle – Press Pac® Drive System

The Press Pac® clutch/brake utilizes a circulating oil system that keeps the housing completely full of oil and continually pumps oil through the clutch/brake system and back to tank. All working parts of the Press Pac® are immersed in a bath of continuously circulated Type F – Automatic Transmission Fluid.

Power from the main motor is transferred from the belt driven flywheel to the drive shaft through a clutch disc stack, which is comprised of an alternating series of sintered bronze friction discs and steel wear discs.

Starting torque initiates the viscous shear of the oil film between the sintered bronze friction discs, which are splined to the hub, and the steel wear discs which are constantly rotating with the flywheel. The hub is mounted on the drive shaft or quill, depending on the clutch/brake model, using keyways or a locking assembly.

At the instant of oil shear, rotation of the steel wear discs impels the oil film, setting the sintered bronze friction discs in motion. Within a split second, synchronous speed is attained. As the pneumatically actuated clutch becomes fully engaged, the discs are firmly clamped together by over 80 PSI of pneumatic pressure. During the lock up of the clutch disc stack, residual oil is expelled from between the alternating discs, eliminating slippage and creating positive power transmission.

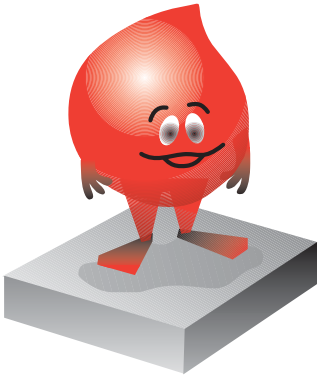

Over 90% of the starting inertia is absorbed by a thin, positive oil film between the alternating discs. The oil itself acts as the power transmission medium, which results in very little wear on the sintered bronze friction disc surfaces. During the first "wear in" of approximately one million cycles, there is approximately .001 (.0245mm) per surface wear. After the first wear in is completed, further wear is almost non existent.

Similarly, braking torque is initiated by the viscous shearing of the oil film. However, the brake pressure is achieved through spring applied pressure, rather than pneumatic applied pressure that is used in clutch actuation.

Oil Shear Principle Advantage

The primary advantage of oil shear technology is to dramatically extend the life of friction surfaces. Friction creates heat, which is inherent in any clutch/brake operation. Direct friction surface contact, which is required for positive torque transfer, causes abrasion and wear on the disc surfaces. Friction discs that are coated with a film of oil are far better suited to withstand the heat and wear because the oil efficiently absorbs heat and protects surfaces from contact abrasion.

Advantages

- Little to no wear of plates in the disc stack
- No brake fade
- More precise operation of the clutch/brake
- Increased clutch/brake reliability
- Increased machine uptime

Oil Shear – Increased Thermal Capacity

A large capacity hydraulic reservoir tank is mounted below the drive unit to pump oil through the clutch/brake and returned to tank where it is cooled and reused. The heat generated from the start/stop inertia of the Press Pac® is absorbed into the oil, circulated from the unit back to the tank where the heat is rapidly dissipated. The Press Pac® circulating oil system uses a state of the art heat exchanger to provide heat dissipation and cool the oil for reuse.

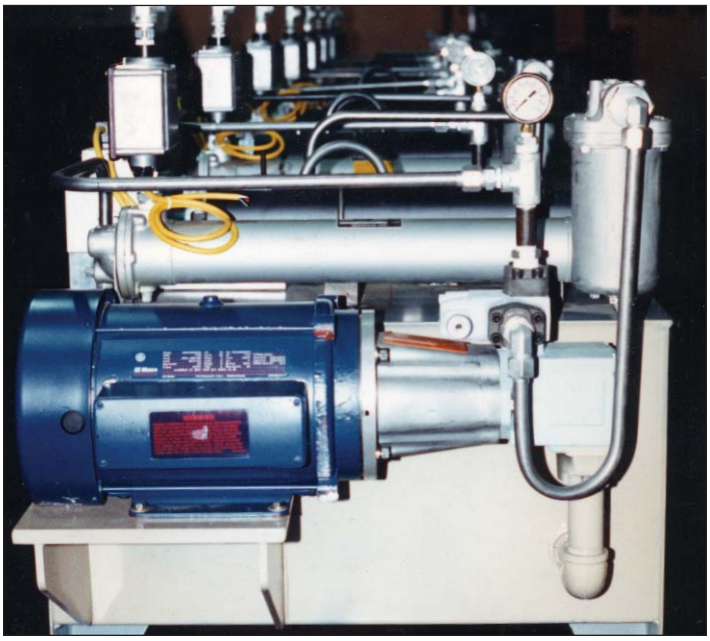

Oil Shear vs. Dry Friction

Press Pac® oil shear clutch/brake will outlast dry friction pneumatic clutch/brakes in some cases up to 10 to 1. Dry friction pneumatic clutches utilize the slippage of dry friction surfaces against wear surfaces to absorb inertia and generate torque. Full engagement of the dry friction surface occurs only after considerable slippage and wear occur. This causes wear of both friction material and wear plate surfaces. Without adequate heat dissipation, the friction surface degrades rapidly, requiring frequent adjustment and disc replacement of both friction discs and wear surfaces.

Some dry friction pneumatic clutch/brakes used on presses are mechanically interlocked; meaning one piston both releases the spring set brake and applies clamping force for the clutch. These mechanically interlocked units have most of the clutch/brake mass mounted on the drive shaft and often represent 80 percent of the total inertia of the press that the clutch/brake must stop and start.

Press builders introduced “low inertia” clutch/brake design in the 1940’s in an effort to reduce the start-stop inertia. This type of design requires separate pistons to release the brake and engage the clutch. The start-stop inertia with this type of design is still usually 60 percent or more of the total inertia.

The trip rate of a press equipped with a dry friction clutch/brake is limited because the mass of the unit determines its heat dissipation capacity, but if this mass is increased, the inertia that must be started and stopped is increased. These factors define a closed loop format from which it is impossible to escape when trying to increase the performance of the system.

Press Pac® 1600 is a compact, very low inertia design that provides superior stopping time performance with precise repeatable performance.

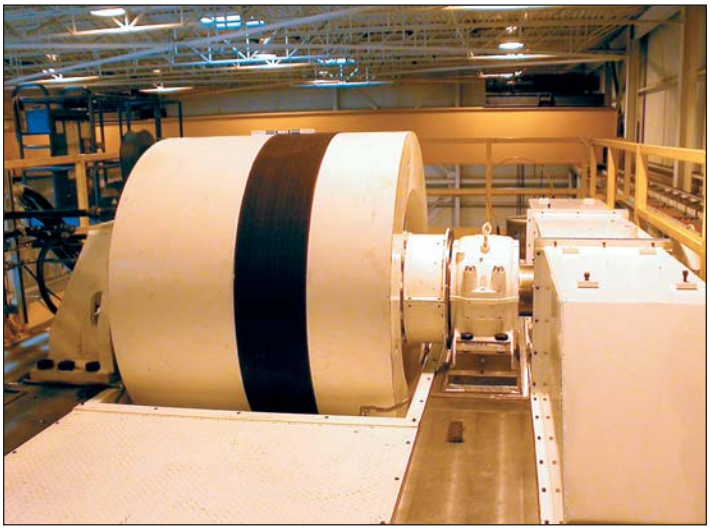

Press Pac Oil Shear Press Drive

Dry Friction Pneumatic Clutch/Brake

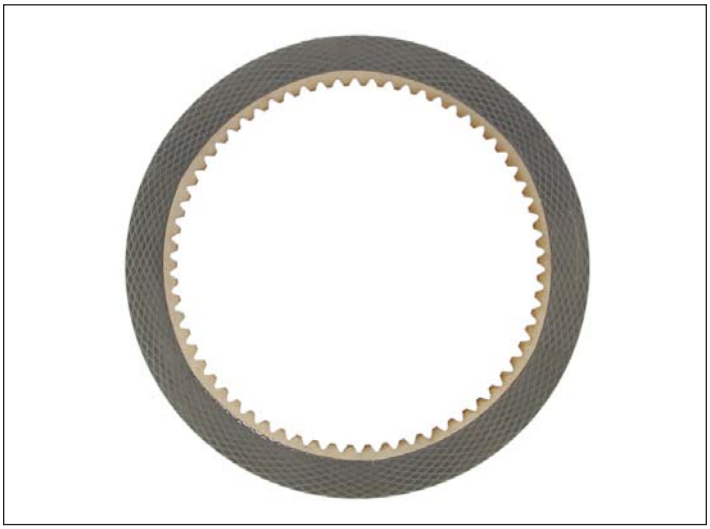

Sintered Bronze Friction Disc

Dry Friction Clutch Disc

Oil Shear Drives For Metal Forming Equipment

	Oil Shear	Dry Friction
Transmission of Starting Torque From Flywheel to Drive Shaft	Viscous Oil Shear Between Discs	Slippage of Dry Friction Surfaces Against Each Other
Full Operation	Lockup of Discs – After Most of Work is Done by Oil Shear (Drive Shaft is in Motion Before Discs Engage)	Lockup of Discs – After They Have Slipped For Considerable Time Putting Drive Shaft In Motion
Braking Action	Viscous Oil Shear Between Discs	Slippage of Dry Friction Surfaces Against Each Other
Full Stop of Press	Lockup of Brake Discs – After Press has Decelerated Through Oil Shear	Lockup of Brake Discs – After Disc Slippage has Decelerated Press
Dissipation of Heat	Circulating Oil System with Heat Exchange Flushes Discs Continually	Air Circulation
Maintenance	Little to No Maintenance	Constant Maintenance
Adjustment of Clutch/Brake	Self Adjusting Clutch / Brake	Constant Adjustment Needed
Friction Discs	Sintered Bronze – Long Lasting	Dry Friction – Frequent Reline Needed
Brake Fade	No Brake Fade	Constant Brake Fade
Flywheel Bearings	Self Lubrication – Integral to Flywheel	Manual Lubrication
SPM - Cycle Rate	**Up to 90% Single Stroke Rate**	**Up to 50% Single Stroke Rate**
Inching / Jogging	Unlimited	Limited to Heat Dissipation of Friction Material
Installation	Simple Installation Little to No Machining/Modification	Difficult Installation Major Changes to Press Components Machining Needed On Site
Installation Time	7-10 Days	2-4 Weeks
Noise	Quiet Engagement of Clutch/Brake	Noisy, Squealing Engagement of Clutch/Brake
Testing	Unit Fully Tested Before Installation	Press Used as Test Stand During Installation
Responsibility	One Company, One Responsibility	Clutch Manufacturer & Machine Repair Co. Dual Responsibility

Testing

The Press Pac® 1600 Series Integral Press Drive System is unique because it is the only hydraulic clutch/brake that comes fully assembled and factory tested.

The Press Pac® is assembled and installed on a test stand at Midwest Brake®. The unit is connected to a main motor, piped to the circulating oil system and filled with oil. Not only is the integral drive system tested, but the circulating oil system supplied to the customer is fully piped, pressure tested and cycled during the testing procedure. A series of quality checks, tests and inspections are performed and documented.

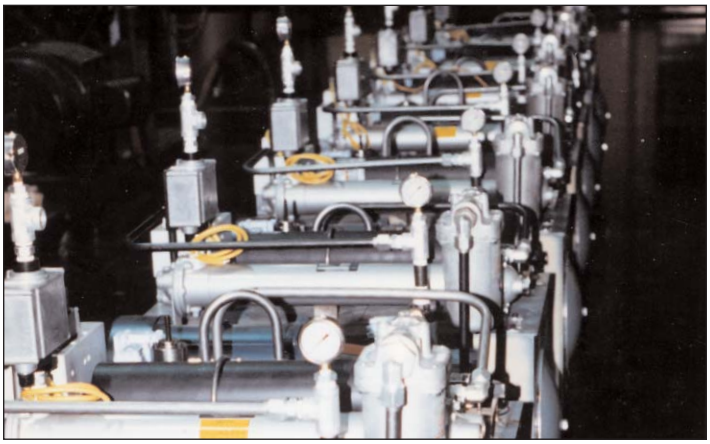

1. Press Pac® Assembly

The Press Pac® unit is fully assembled on the factory floor. The clutch/brake components are assembled on the drive shaft by a team of mechanics and prepared for testing.

2. Testing

The fully assembled Press Pac® is installed on the test stand and run through a series of checks that include run out measurement, temperature monitoring, vibration analysis and leak inspection. Factory certification and testing of the unit ensures that the unit will run properly and the press will not be used as a test stand during installation.

3. Run Out

Run out and concentricity on the diameters, facing of the flywheel, and drive shaft are measured and documented to ensure they are within factory specifications. This check ensures the unit will operate properly and increase the uptime of your the press.

4. Circulating Oil System Tested

The circulating oil system and actuation system are tested with the Press Pac® Series Integral Drive System for a period of 8 hours. Testing of the system confirms the functionality and performance of the oil system components.

5. Temperature

Temperature is monitored throughout the testing procedure and readings are recorded as part of the inspection report. Normal temperature readings confirm the proper functioning of the clutch/brake and the cooling system.

6. Flywheel Dynamically Balanced

The unit is dynamically balanced while on the test stand to ensure proper operation and long life.

7. Vibration Analysis

A vibration analysis is performed to certify the unit is operating within acceptable limits and is properly balanced. (Please note this is not a standard feature, but is available as an option).

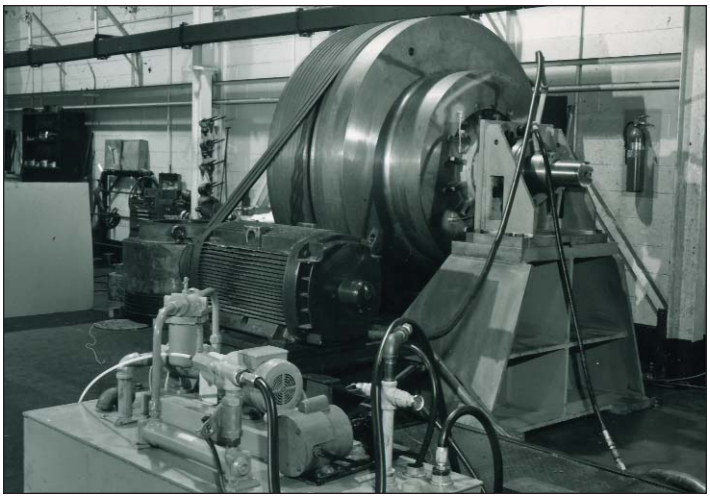

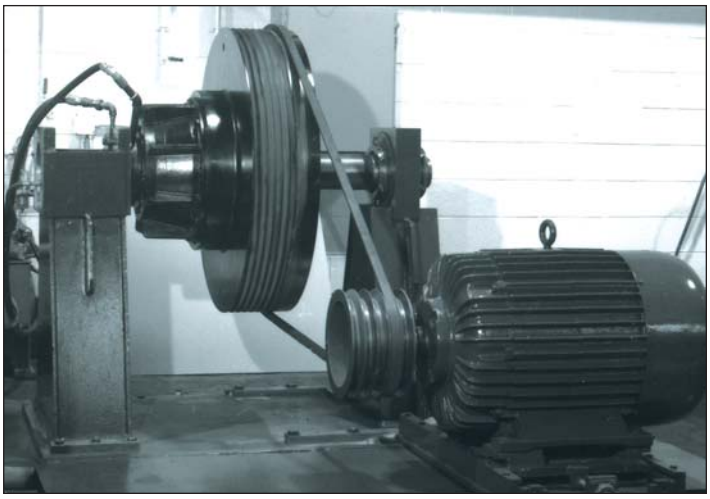

Preventative Maintenance

The Press Pac® 1600 Series Integral Press Drive System is designed to maximize the uptime and reliability of the machine. A preventative maintenance program is simple, straight forward and can be tailored to meet your production requirements. Midwest Brake® offers experienced Field Service Technicians that can perform annual inspections of your unit or train the customer's maintenance personnel to perform these inspections.

Preventive Maintenance Schedule

- Oil Leaks – Visual inspection monthly
- Oil Temperature – Inspect daily during initial installation, then every six months thereafter.
- Filter Element – Change monthly for the first three months of operation, then every six months thereafter.
- Change Oil and Clean Tank – Annually

Inspection

Midwest Brake® offers qualified, expert Field Service Technicians to perform factory certified inspection of the Press Pac® Clutch/Brake drive system, hydraulic system and related press systems.

Our technicians have years of experience in press related service including: Press Inspections, Press Assembly, Press Repair and Clutch/Brake Assembly, Trouble Shooting and diagnosis.

Clutch and Brake Inspection

Factory Certified Rebuild

Midwest Brake® offers fast, reliable factory certified rebuild and repair services for all Press Pac® units. We can inspect, disassemble, repair and rebuild the unit with OEM manufactured parts.

The Midwest Brake® factory certified rebuild will restore the unit to a like new condition, complete with a one year factory warranty.

The unit will be returned to the customer facility fully tested, painted and ready for assembly onto the press. Thus, you can be assured your unit will operate as designed and specified.

- Fast Teardown & Disassembly
- Complete Inspection
- OEM Repair Parts In Stock
- One Year Warranty
- Fully Tested & Pressure Checked
- Factory Support – Installation & Check Out

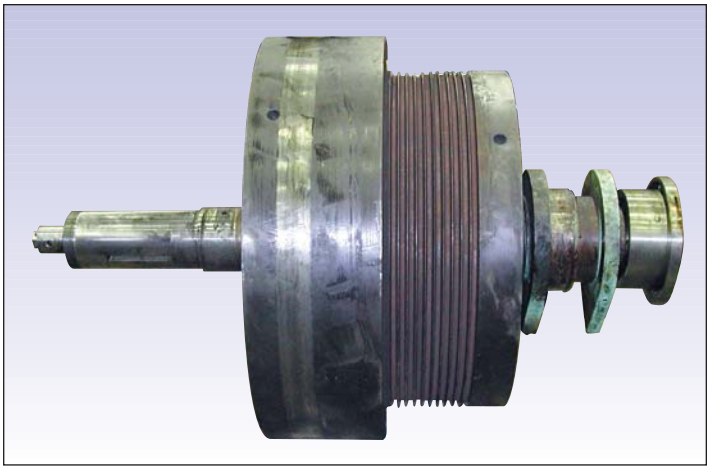

Before Factory Rebuild

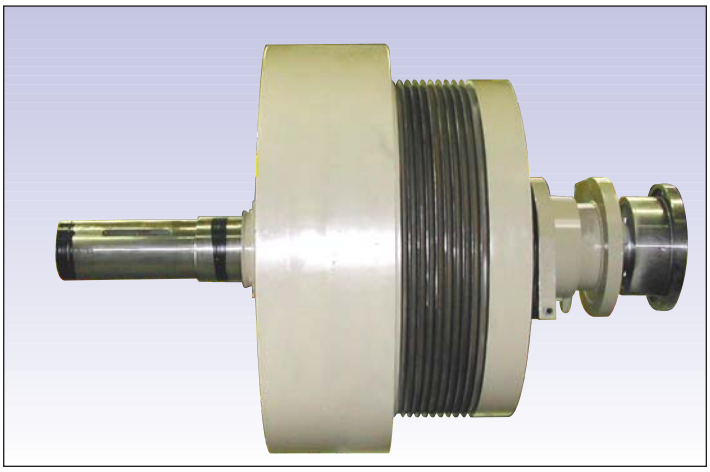

After Factory Rebuild

Press Inspections

Midwest Brake® offers skilled Field Service Technicians with experience in inspection, maintenance, repair and installation of mechanical presses. Years of field experience allow us to inspect, trouble shoot and supervise repairs for all styles of mechanical and hydraulic presses from 30 ton up to 4,000 ton presses.

Press inspections are designed to evaluate the current status of your press. Vital information regarding the condition of your press will be supplied to accurately predict wear and premature failure of various systems and components. Combined with a preventive maintenance program, inspection of your press will help eliminate downtime of your equipment and track the progression of wear.

Working with our highly qualified Field Service Technicians, your maintenance personnel will gain knowledge and experience of the equipment, inspection techniques and proper maintenance of the press.

Note: All inspections come with a detailed report based on parameters specified by customer. (Sample reports available by request)

We Can Tailor an Inspection Program to Fit Your Needs.

Reasons to Start an Inspection Program

- Troubleshoot a Press In Production
- Capital Equipment Evaluation
  - Inspect and Access a Press Before Purchasing or Selling
- Inspect Before Start-up to Check for Mechanical or Hydraulic Issues
- Inspect for Preventative Maintenance (PM)

Hydraulic and Pneumatic Systems Inspection

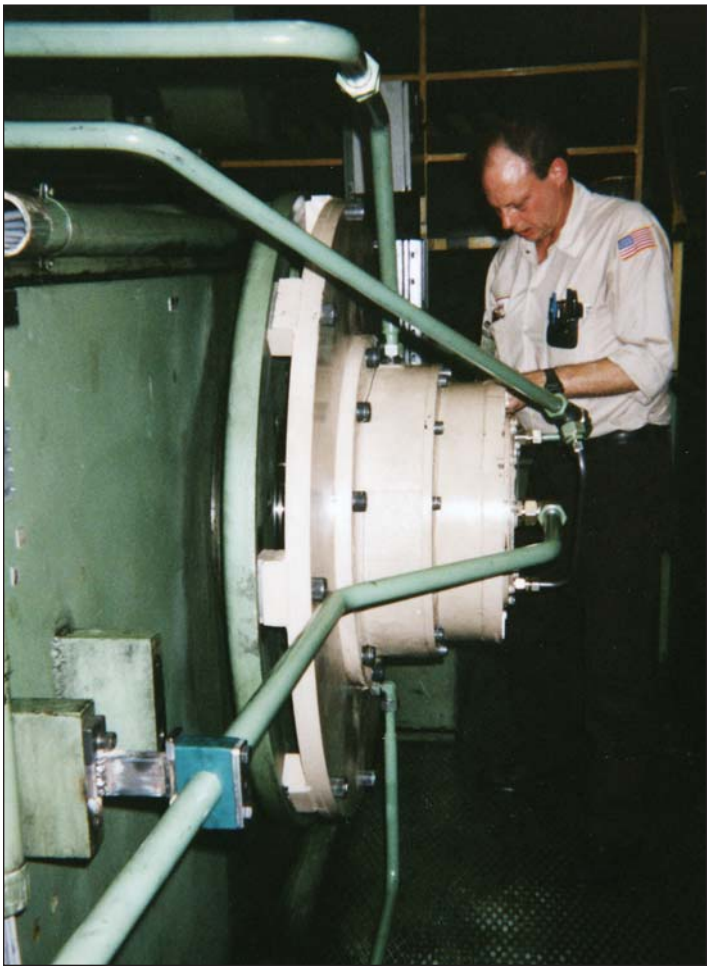

Clutch and Brake Inspection

Press Pac® 1600 Series Application Data Sheet

Request for Quotation

Midwest Brake® is able to provide a quotation of the Press Pac® drive system with a few basic, simple pieces of information.

This standard form is to be filled out. Using this information, torque requirements can be calculated and the proper model will be selected.

Please visit our website to download brochures and application data sheets.

Contact Information:

Midwest Brake®
26255 Groesbeck Hwy.
Warren, MI 48089

Phone: 586.775.3000
Fax: 586.775.3040

E-mail:

sales@midwestbrake.com

Website:

www.midwestbrake.com

Company

Address

City State Zip

Contact Title

Phone Fax

Press Manufacturer* Date of Manufacture

Type of Press*

☐ Single Action ☐ Top Drive ☐ Knuckle Joint
☐ Double Action ☐ Bottom Drive ☐ Forging Press

Press Model Number

Press Serial Number

Tonnage* Rated Tonnage Distance*

Stroke of Slide*

Continuous Strokes Per Minute*

Press Gear Ratio

Length of Connection (Pitman Length)

Flywheel – Outside Diameter*

Sheave – Outside Diameter*

Main Motor HP*

Main Motor RPM*

Other information that may be useful:

***Required Information**

26255 Groesbeck Hwy.
Warren, MI 48089 U.S.A.
586.775.3000 • 586.775.3040 (Fax)
800.525.4503 (Toll Free)
www.midwestbrake.com
sales@midwestbrake.com (E-mail)

BULLETIN NO: PP1600-001